AI Projects

- 2–4 persons per team
- 20 min presentation
- 25% of final grade

topic	project name	max nr of	due at sessio
rational agents (Java)	*RoboCode*	3	2
informed search (Java)	*Rush Hour*	2	3
adverserial search	*Connect 4*	1	3
logical agents (CLIPS)	*Hunt the Wumpus*	2	4
planning (PDDL4J)	*Monsters & Globes*	2	4

- Send E-Mail to erik.pitzer@fh-hagenberg.at

  e.g. (Pitzer, Dreiseitl): RC, RH, C4, W, MG

RoboCode (Java)

- Build your own rational agent

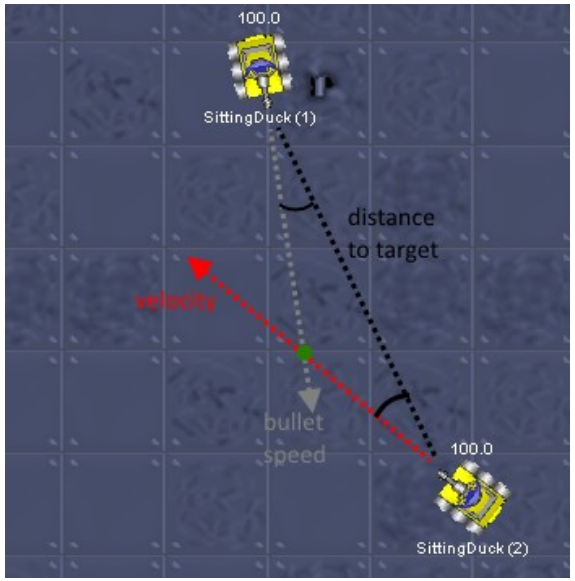

RushHour (Java)

- Explore A* and search heuristics in the context of a sliding blocks puzzle (some code given)

```
public class AStar {

    /** The solution path is stored here */
    public State[] path;

    private Heuristic heuristic;

    private LinkedList OPEN;

    private LinkedList CLOSED;
```

Connect Four (Java)

- Investigate performance characteristics of alpha-beta pruning using the Connect Four game (running code provided, modifications required)

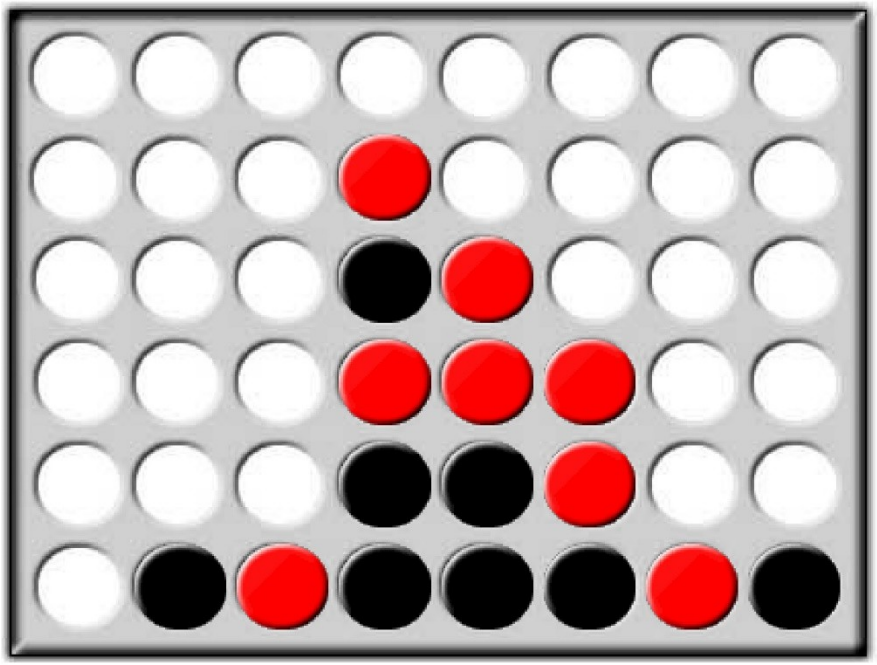

Hunt the Wumpus (CLIPS)

- build your own logical agent
- includes event-based simulation

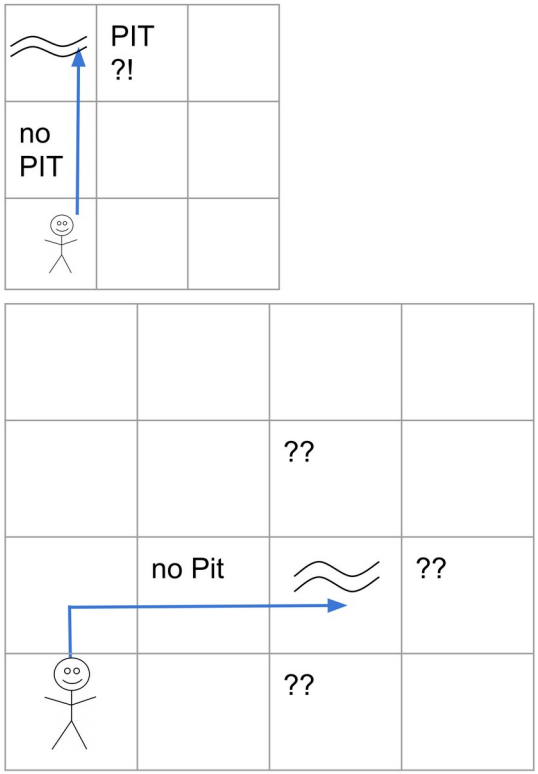

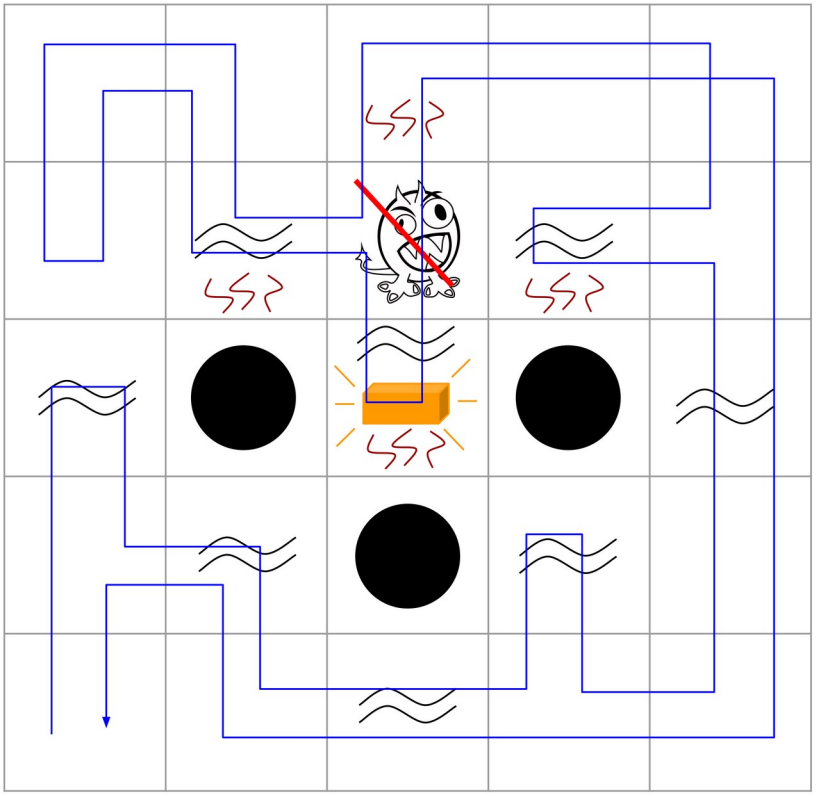

Monsters and Globes (PDDL)

- Solve a given resource allocation problem by writing your own PDDL action specifications